HOUSEHOLD GOODS DESCRIPTIVE INVENTORY

TAG LOT NO. _____

TAG COLOR _____ NOS _____ THRU _____

AGENT

PAGE NO | NO OF PAGES

CONTRACTOR OR CARRIER

CARRIER'S REFERENCE NO

OWNER'S GRADE OR RATING AND NAME

CONTRACT OR BIL NO

ORIGIN LOADING ADDRESS | CITY | STATE

GOVT. SERVICE ORDER NO

DESTINATION

VAN NUMBER

DESCRIPTIVE SYMBOLS

B/W - BLACK & WHITE TV
C - COLOR TV
CP - CARRIER PACKED
PBO - PACKED BY OWNER
CO - CARRIER CONSOLIDATED
OBO - CONSOLIDATED BY OWNER
PB - PROFESSIONAL BOOKS
PE - PROFESSIONAL EQUIPMENT
PP - PROFESSIONAL PAPERS

EXCEPTION SYMBOLS

BE - BENT
BR - BROKEN
CU - CURVED
CH - CHIPPED
CW - CONTENTS & CON-TAINER MISSING
D - DENTED
F - FADED
G - GOUGED
L - LARGE
M - MARKED
MI - MISSING
MO - MOTHEATEN
R - RUSTED
RU - RUSTED
SC - SCRATCHED
SH - SHORT
SD - SOILED
T - TORN
W - SMALL WORN
Z - CRACKED

LOCATION SYMBOLS

1 - FRONT
2 - BOTTOM
3 - BACK
4 - RIGHT
5 - LEFT
6 - TOP
7 - REAR
8 - RIGHT
9 - BOTTOM
10 - TOP
11 - TOP
12 - BOTTOM
13 - CENTER
14 - SEAT
15 - CRANKER
16 - CORNER

NOTE THE OMISSION OF THESE SYMBOLS INDICATES GOOD CONDITION EXCEPT FOR NORMAL WEAR

ITEM NO	CRATE REF	CRATE DIM	CRATE DIM	CRATE DIM	ARTICLES	DESCRIPT SYMBOLS	CONDITION AT ORIGIN	EXCEPTIONS OF ARTS AT DESTINATION
1								
2								
3								
4								
5								
6								
7								
8								
9								
0								
1								
2								
3								
4								
5								
6								
7								
8								
9								
0								
1								
2								
3								
4								
5								
6								
7								
8								
9								
0								
1								
2								
3								
4								
5								
6								
7								
8								
9								
0								

CARRIERS HAVE THE FOLLOWING OPTIONS ON THE INVENTORY-NO OTHER DEVIATIONS ARE AUTHORIZED.

1. USE OF DOUBLE OR SINGLE COLUMNS. WHEN SINGLE COLUMN IS USED, CARRIERS WILL ADJUST "ITEM NO.", CR, REF", ARTICLES", "CONDITION AT ORIGIN", AND EXCEPTIONS (IF ANY)" AT DESTINATION'S COLUMN SPACE ACCORDINGLY.

2. PACKING LIST FOR CARRIERS ONLY.

ITEM NO	REMARKS/EXCEPTIONS

"WE HAVE CHECKED ALL ITEMS LISTED AND NUMBERED 1 TO _____ INCLUSIVE AND ACKNOWLEDGE THAT THIS IS A TRUE AND COMPLETE LIST OF THE GOODS TENDERED AND OF THE STATE OF THE GOODS RECEIVED."

WARNING → *BEFORE SIGNING — CHECK SHIPMENT, COUNT ITEMS AND DESCRIBE LOSS OR DAMAGE IN SPACE ON THE RIGHT ABOVE*

AT ORIGIN	CONTRACTOR, CARRIER OR REPRESENTATIVE (DRIVER) (SIGNATURE)	DATE TIME	AT DESTI-NATION	CONTRACTOR, CARRIER OR REPRESENTATIVE (DRIVER) (SIGNATURE)	DATE TIME
	OWNER OR AUTHORIZED AGENT (SIGNATURE)	DATE TIME		OWNER OR AUTHORIZED AGENT (SIGNATURE)	DATE TIME

(figure P-1)

Rev. 8/80

PACKING LIST OF HOUSEHOLD GOODS

Page 1 of

SHIPPING ACTIVITY	OWNER(Name)	(Rank or rate)
PACKED BY	LOT NO.	DATE
CONSIGNED TO (Name and complete address)		

METHOD OF SHIPMENT

☐ Rail (LCL) ☐ Air Freight ☐ Motor Freight ☐ Water Other _____ (Specify)

Container No.	*Type of Container	Contents	Inv No.	Wt. (Lbs.)	Location of Condition	Cubic Feet

*ABBREVIATIONS

FOR TYPE OF CONTAINER:	EXCEPTION SYMBOLS			LOCATION SYMBOLS	
BW-Nailed Wood	BR-Broken	F-Faded	R- Rubbed	B-Bottom	RT-Right
FC-Fiber board	BU-Burned	G-Gouged	SC-Scratched	C-Corner	S-Side
OC-Open Crate	CH-Chipped	GC-Good Condition	SO-Soiled	F-Front	TOP-Top
BRL-Barrel	CU-Contents and Conditions Unknown	L-Loose	T- Torn	LEF-left	LG-Leg
HCCC-Household Goods Consolidated Crate	D- Dented	M-Marred	Z- Cracked	RE-Rear	V- Veneer
		NW-Normal Wear	OR-Owner's Risk		

Packing List of Household Goods

(figure P-2)

LOCATION OF PERMANENT MARKINGS ON PPP-B-580 WOOD HOUSEHOLD GOODS BOX

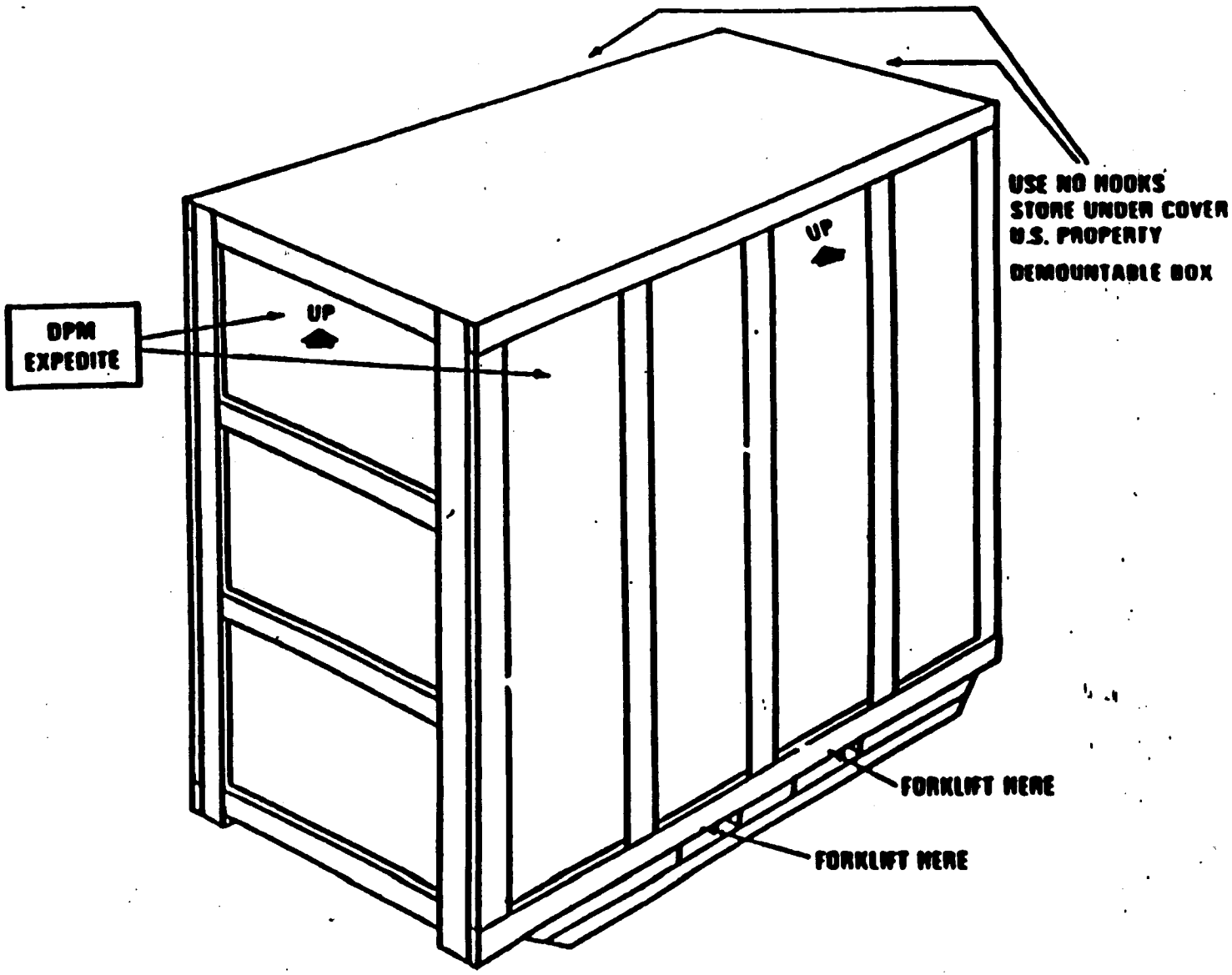

(Figure P-3)

LOCATION OF PERMANENT MARKINGS ON MIL-STD-1489

HOUSEHOLD GOODS BOX

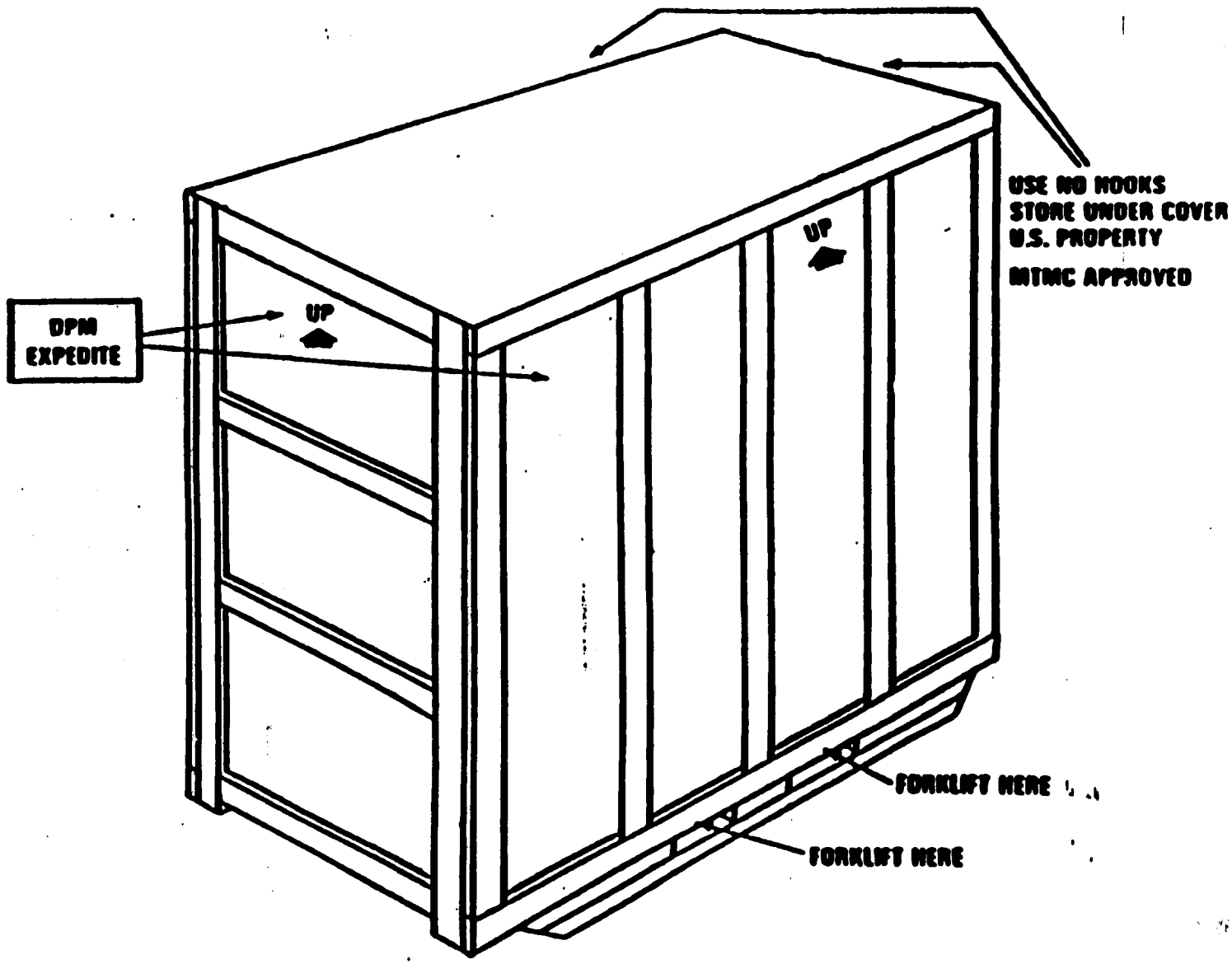

(Figure P-4)

CONTAINER MARKING FOR HOUSEHOLD GOODS

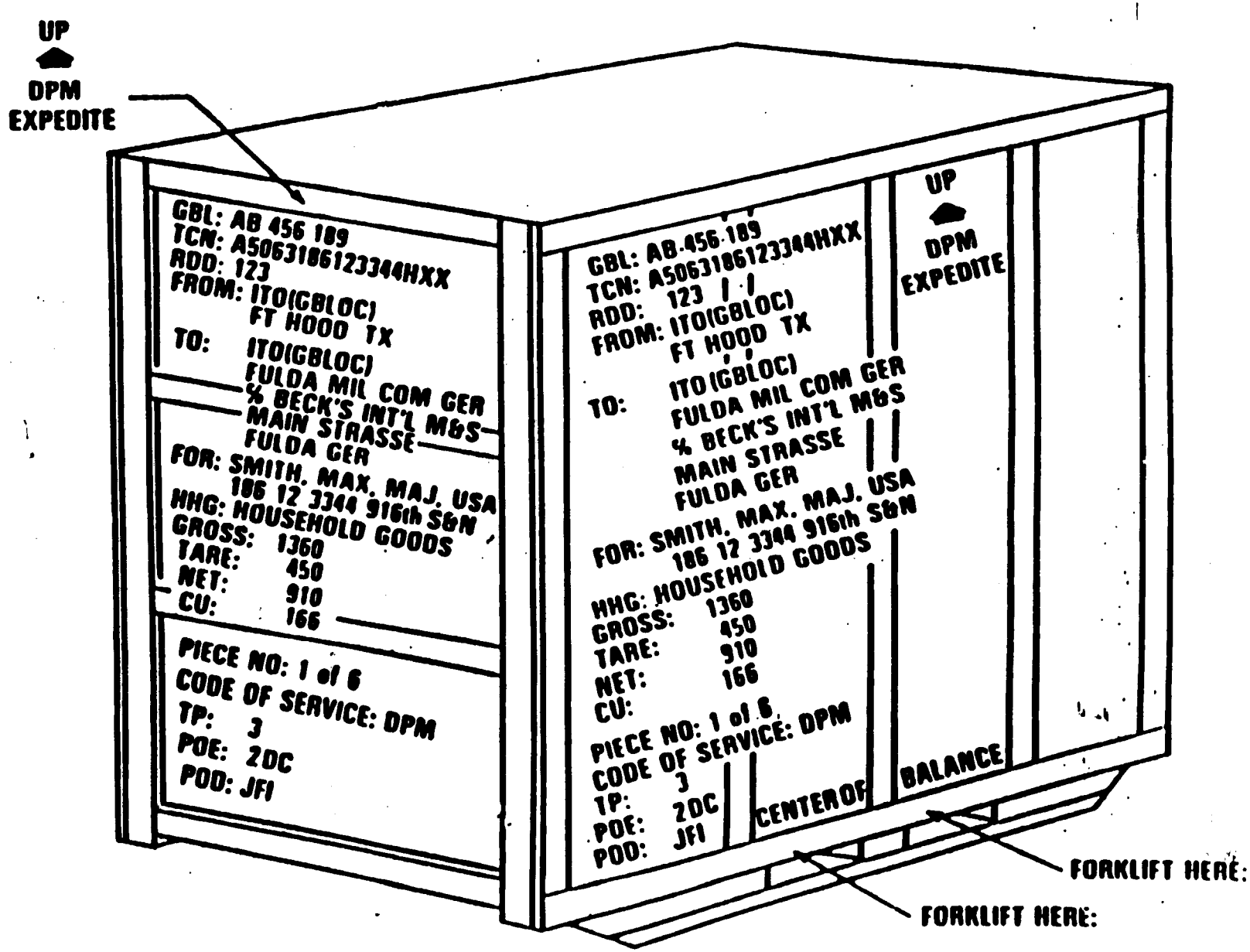

(Figure P-5)

MILITARY SHIPMENT LABEL	Form Approved OMB No 0704-0188
1. TRANSPORTATION CONTROL NUMBER A5063186123344HXX	2. POSTAGE DATA
3. FROM ITO- (GBLOC) Ft HOOD TX	4. TYPE SERVICE DPM
5. SHIP TO/POE POE- 2DC	6. TRANS PRIORITY 3
7. POD POD-JF1	8. PROJECT
9. ULTIMATE CONSIGNEE OR MARK FOR ITO-(GBLOC) FULDA MIL COM GER ZBECK'S INT'L M&S MAIN Strasse, FULDA, GER FOR: SMITH, MAX, MAJ, USA 123 45 6789, 916th S&N	10. WT. (Tha pieces) Gross1360 Care420net940 11. ROD 123 12. CUBE (Tha pieces) 166 13. CHARGES 14. DATE SHIPPED 15. FMS CASE NUMBER 16. PIECE NUMBER 1 17. TOTAL PIECES 6

DD Form 1387, NOV 86 Previous editions are obsolete. GPO : 1987 O - 171-241

(figure P-6)

Sample of Military Shipment Label for Household Goods

MARKING OF UNACCOMPANIED BAGGAGE

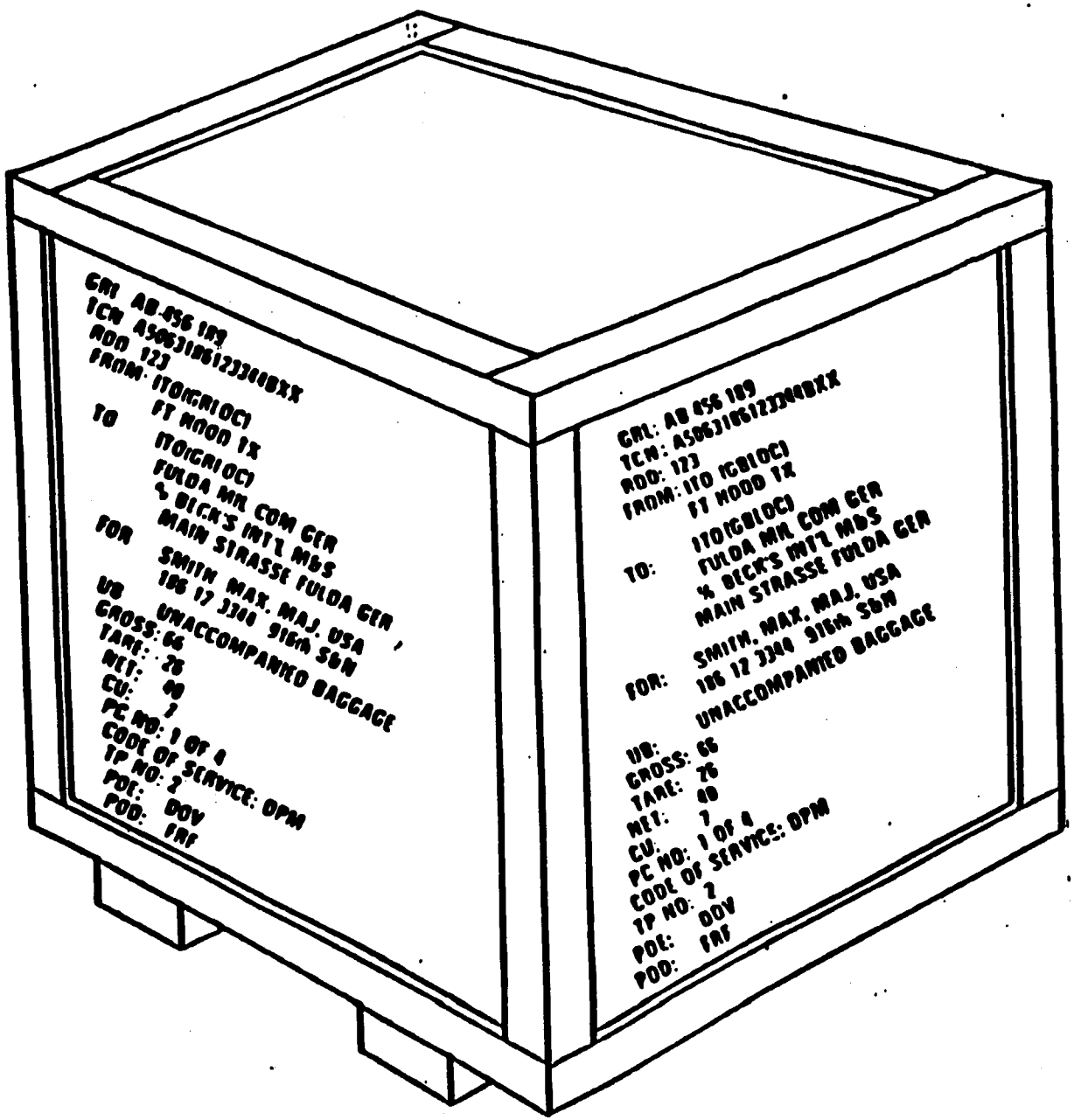

(Figure P-7)

MARKING OF UNACCOMPANIED BAGGAGE SHIPMENTS (CODE J)

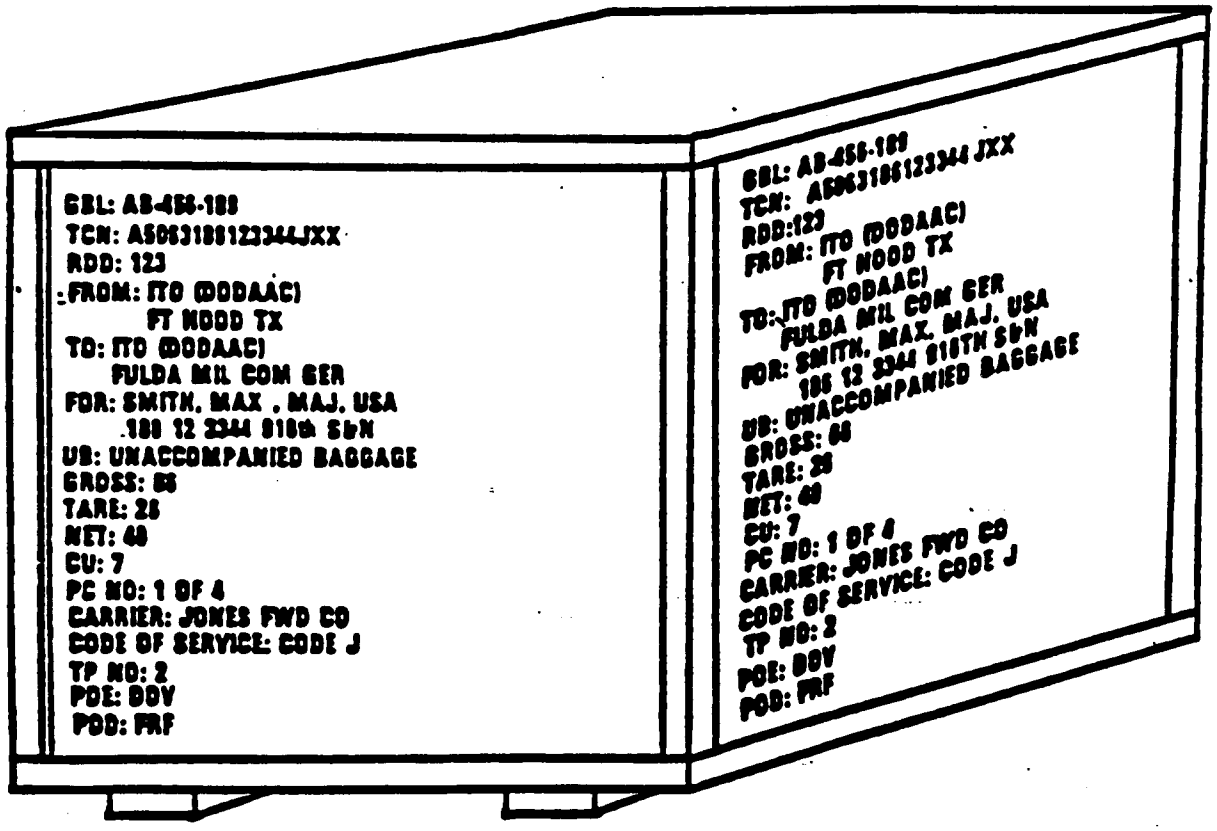

(figure P-7.1)

MILITARY SHIPMENT LABEL	Form Approved OMB No 0704-0188
1. TRANSPORTATION CONTROL NUMBER A50631861123344BXX	2. POSTAGE DATA
3. FROM ITO - (GBLOC) FT HOOD TX	4. TYPE SERVICE DPM
5. SHIP TO/POE APOE - DOV	6. TRANS PRIORITY 2
7. POD APOD - FRF	8. PROJECT

9. ULTIMATE CONSIGNEE OR MARK FOR	10. WT (This piece)	11. RDD
ITO - (GBLOC) FULDA MIL COM GER %BECK'S INT'L M&S MAIN STRASSE, FULDA, GER FOR: SMITH, MAX, MAJ, USA 186 12 3344, 916TH S&N	GROSS: 166 TARE: 40NET140	123
	12. CUBE (This piece) 14	13. CHARGES
	14. DATE SHIPPED	15. FMS CASE NUMBER
	16. PIECE NUMBER 1	
	17. TOTAL PIECES 4	

DD Form 1387, NOV 86 *Previous editions are obsolete.* S/N 0102 LF-001 3871

(figure P-8)